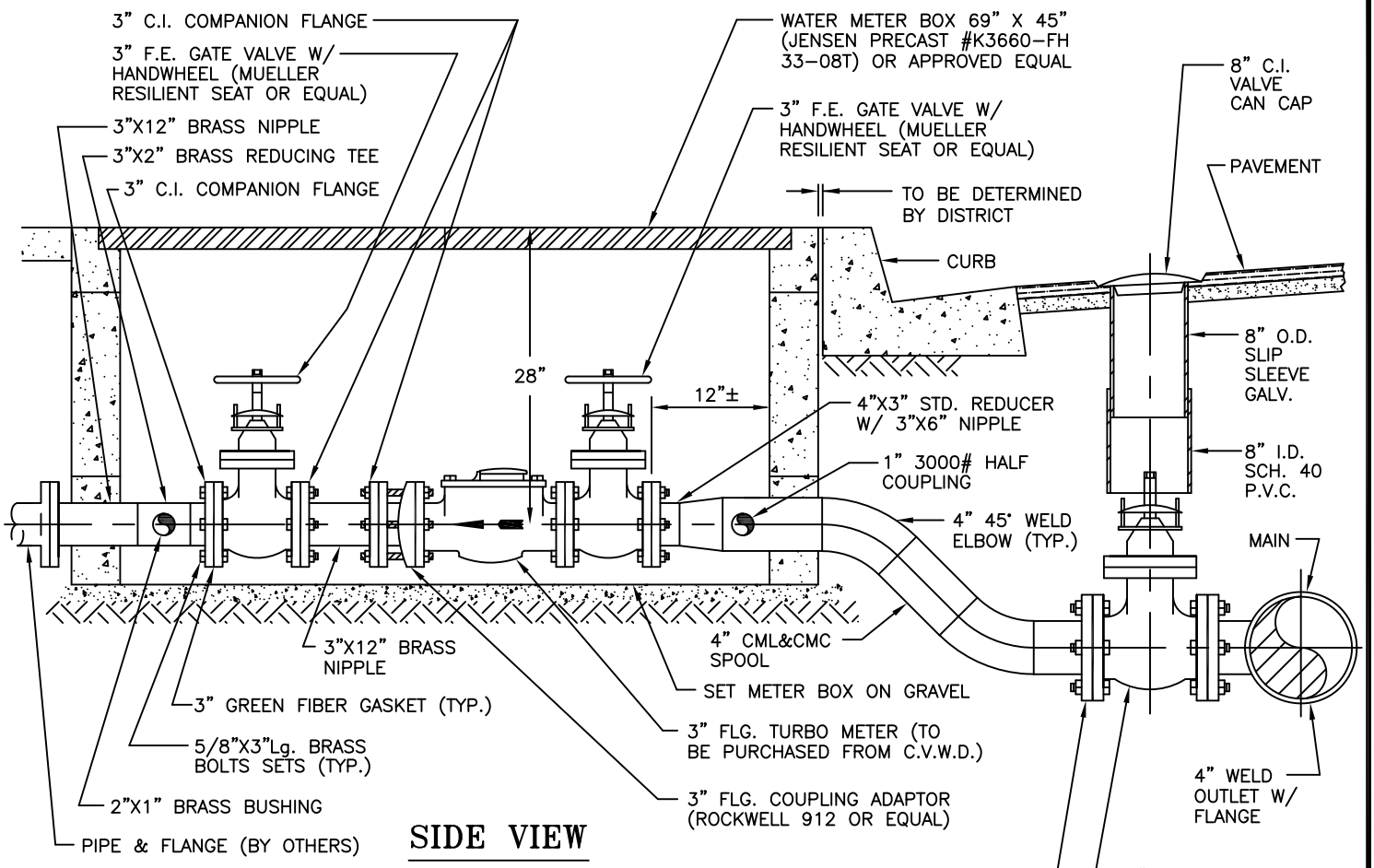

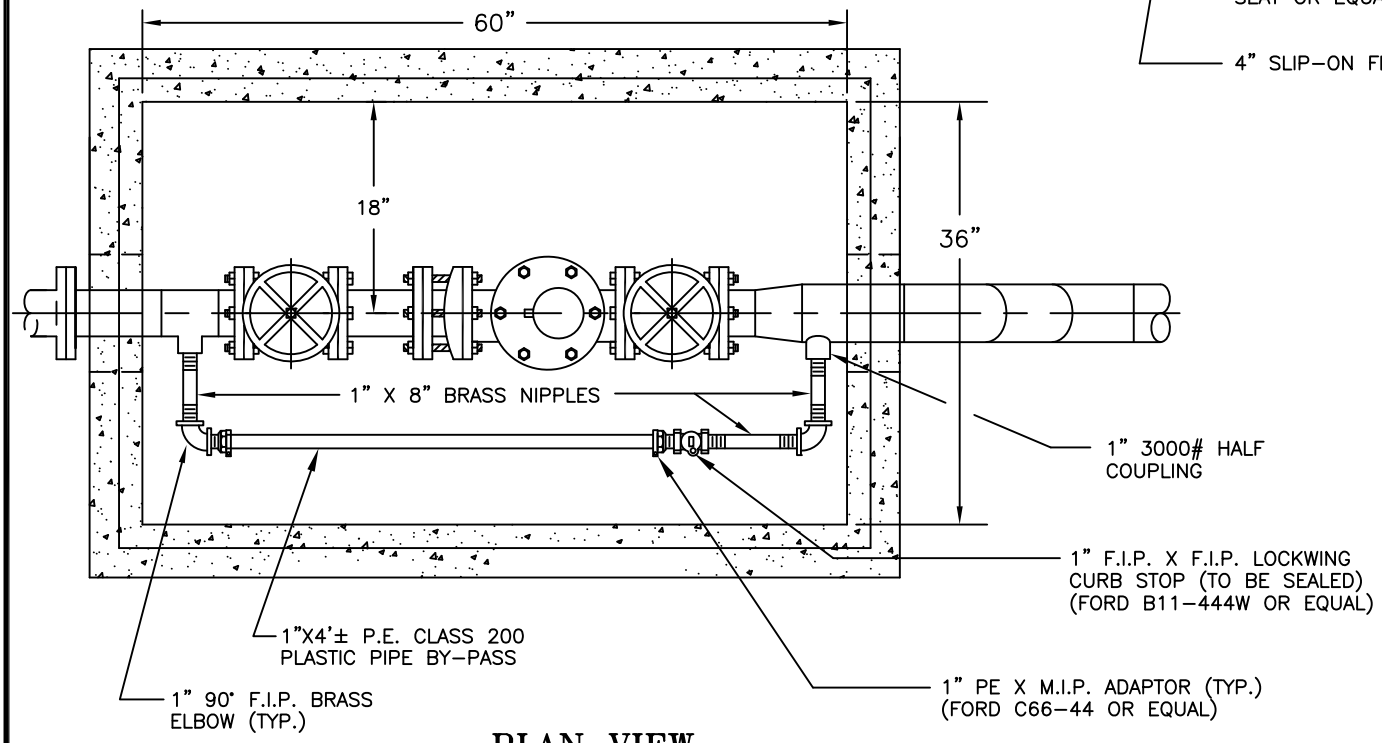

CRESCENTA VALLEY WATER DISTRICT			
DRAWN: JAH DATE: 1/95	REV. 3/11	3" TURBO METER INSTALLATION	DWG. NO. 10-05W